PIR Adjustment:

- The unit must be installed in a vertical position, and fitted 1.8-2.5m above the ground.
- The PIR sensor can be adjusted, allowing the detection distance to be altered to suit the location. The detection angle is set at 120º. The detection range up to 8 metres. The duration that lamp stays on can also be altered from 10 seconds - 10 minutes. The LUX rang is 2-2000Lux. Use a small screwdriver to adjust the "TIME" and "SENS" screws. When adjusting the sensitivity (detection distance) in daylight it will be necessary to cover the sensor to simulate night time.

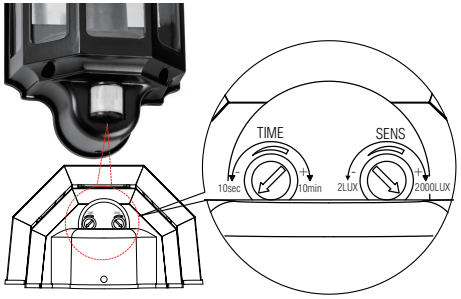

Fitting/replacing bulbs

- When changing a bulb, always switch off at the mains and allow the bulb to cool before handling. Dispose of used bulbs carefully. Do not exceed the wattage stated or use a different shape bulb from that indicated on the fitting.
- Do not exceed the wattage stated or use a different shape bulb from that indicated on the fitting.
- Unscrew the bulb anti clockwise to remove.
- Carefully locate the bulb in the lampholder and turn clockwise to secure.

15W E27 GLS

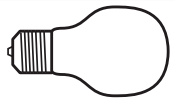

We recommend cleaning with a soft dry cloth.
Do not use solvents or abrasive cleaners as these could damage the finish.

Glass parts – Wash with warm water or just use a damp cloth. Do not use abrasive materials as these will damage the finish.

Recycling advice

Waste electrical products should not be disposed of with household waste. Please recycle where facilities exist. Check with your Local Authority or retailer for recycling advice.

Safety information

For your safety, always switch off the power supply before changing lightbulbs, or cleaning.

Replace Cracked Shade

This bulb is protected by a glass shade. This part must be replaced immediately should the glass shade become cracked or damaged. This fitting must not be used without the glass shade in place.

UK Manufacturer: BH17 7BY
EU Manufacturer: Brilliant AG,
Brilliantstrasse 1, D-27442 Gnarrenburg

V7 13/03/2025

Instruction leaflet

Traditional PIR Half-Lantern

1818PIR

saxby lighting

Thank you for purchasing this light fitting. Please read the instructions carefully before use to ensure safe and satisfactory operation of this product. Please retain these instructions for future reference.

Warning

This is a Class 1 product and must be earthed.

Please read these instructions carefully before commencing any work.

This unit must be fitted by a competent and qualified electrician.

Install in accordance with IEE Wiring regulations and current Building Regulations.

To prevent electrocution switch off at mains supply before installing or maintaining this fitting. Ensure other persons cannot restore the electrical supply without your knowledge. If you are in any doubt, please consult a qualified electrician.

This light fitting should be connected to a fused circuit.

If replacing an existing fitting, make a careful note of the connections.

Always use the correct type and wattage bulb. Never exceed the wattage stated.

When changing a bulb, always switch off at the mains and allow the old bulb to cool down before handling. Dispose of used bulbs carefully and responsibly.

Waste electrical products should not be disposed of with household waste. Please recycle where facilities exist. Check with your local authority or retailer for recycling advice.

This product is rated at IP44.

This product is not suitable for location in or near a marine environment.

The entire unit gets hot whilst on for a period of time.

Specification

Voltage:	220-240V 50Hz a.c.
Lamp:	1 x Max. 15W E27 GLS
IP rating:	44

Layout

- Plan the desired layout of this fitting carefully, ensuring the cables will reach the distance between the junction box and the light fitting
- Avoid locating any cables in positions that would cause a hazard. Position cables and junction boxes (not supplied) away from areas where they may be at risk from being cut, trapped or damaged
- Cables in walls must be protected using suitable conduit or plastic trunking.
- The mains supply cable must have a minimum cross sectional area of 1.0mm^2
- This product has special protection against the ingress of moisture and is IP44 rated.

Installation

Existing fittings must be completely removed before installation of a new product. Before removing the existing fitting, **carefully note the position of each set of wires.**

- Undo 5 screws and remove the front lantern cover and set them aside for refit.
- Undo two screws on PIR sensor to remove the PIR sensor and set them aside for refit.
- Undo one screw from the plastic base of PIR sensor to remove the plastic base and set them aside for refit.
- Hold the rear plate in place and mark the position of the holes. Ensure that the product is level. Ensure the wall is capable of holding the weight of the product. Take care to avoid damaging any concealed wiring and pipes. The correct fixings should be used for brick, cavity walls or plasterboard.
- Pull supply wires through rubber grommet on wall back then fix the wall back to the wall using screws and pugs.
- Wire as detailed below.
- Refit the plastic cover over the terminal block and secure in place using tthe screw.
- Refit the PIR in the slot.
- Fit the bulb (Never fit bulbs of a higher wattage than those specified on the label as these may cause over heating and damage the fitting.)
- Refit the 5 screws to fit the lantern cover in place.
- Replace fuse or circuit breaker and switch on. Your light is now ready for use.

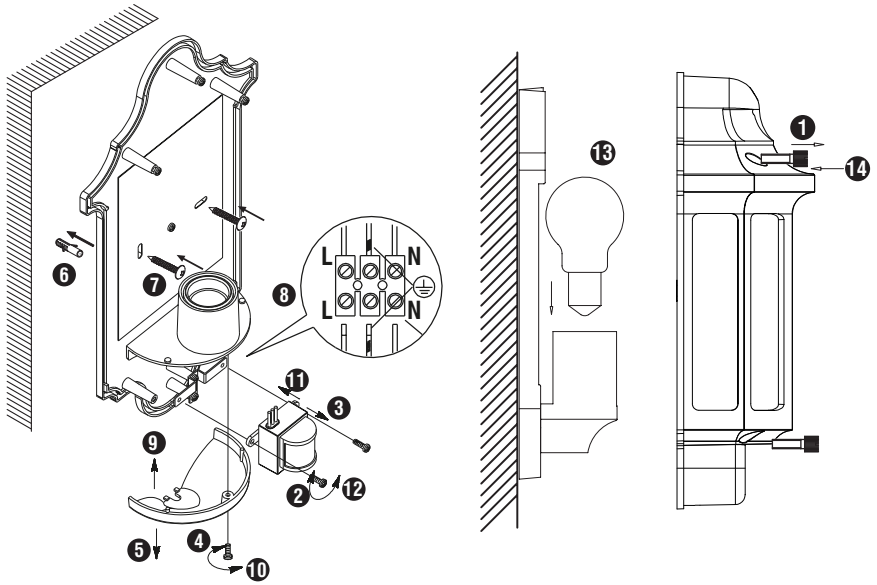

Wiring

Having correctly identified the wiring from your existing light fitting and connect to the connection block inside the product in the following way:

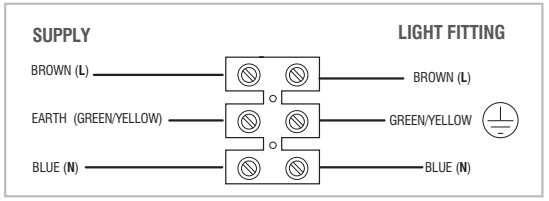

Check that...

- You have correctly identified the wires.
- The connections are tight.
- No loose strands have been left out of the connection block.